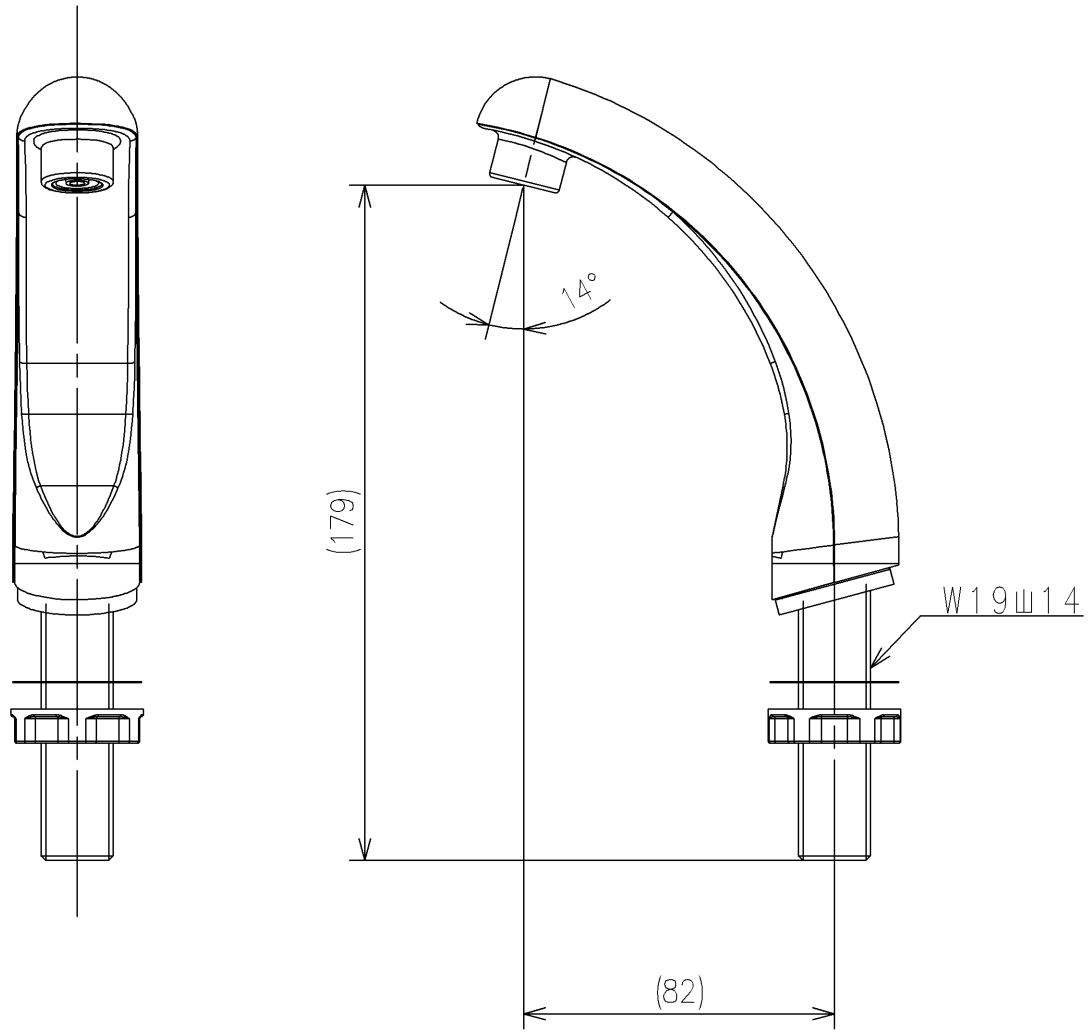

TOTO		UNIT mm	SCALE 1:2	DATE 2022-Nov-30	DRAWN hisashi.koga
TITLE 手洗金具					CHECKED hiroshi.yabe
HAND WASH FITTINGS					APPROVED hiroshi.ono
REMARKS					ITEM NUMBER HH0705R

※日本販売品の衛生陶器の寸法許容差はJIS A5207に準ずる